AZ3 HTE P.A.S. Concept Spray Gun

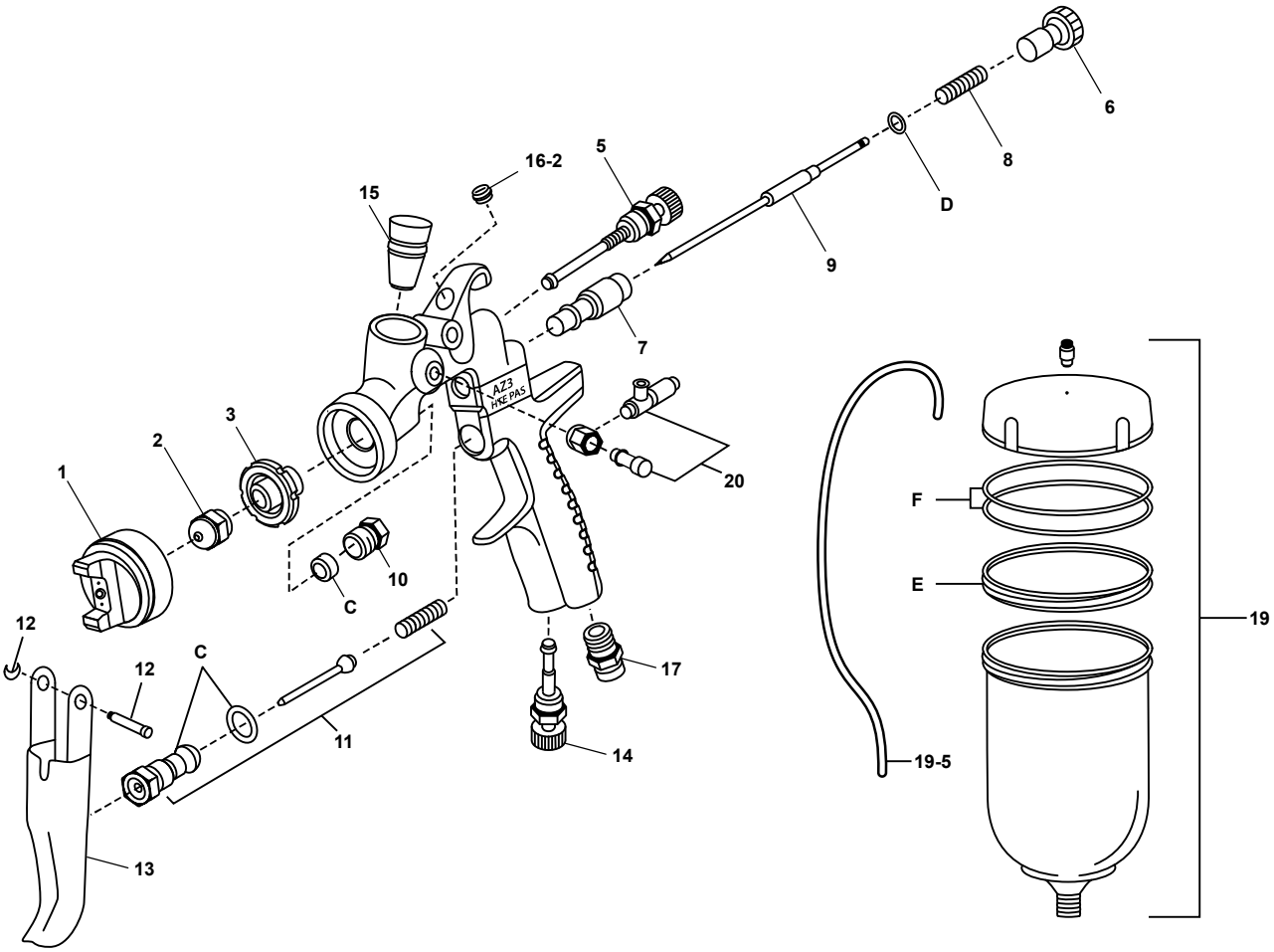

ITEM NO.	PART NO.	DESCRIPTION	ITEM NO.	PART NO.	DESCRIPTION
1	W2CAP83AG13	P1 Aircap Set (1.3 - 2.0mm)	13	W2COM6051	Trigger
2+9	W2ADU83AG13	PAS Needle / Nozzle Set (1.3mm)	14	93845531	Air Adjustment Set
2+9	W2ADU83AG15	PAS Needle / Nozzle Set (1.5mm)	15	W2013040100	Threaded Brushing
2+9	W2ADU83AG18	PAS Needle / Nozzle Set (1.8mm)	16	W2COM6050	Plug
2+9	W2ADU83AG20	PAS Needle / Nozzle Set (2.0mm)	17	W2COM5000	Air Nipple
3	W3COM3050	Nozzle Holder	19	WOCUPAZ85	Pressurised Pot
5	93842601	Fan Pattern Adjustment Set	19.5	0010002700	Air Hose
6	W2010141000	Fluid Adjustment Knob	20	W2SUB6066	Pressure Regulator Set
7	W2010140900	Fluid Needle Guide	C&D	AZ3RSK	AZ3 Reservice Kit
8	W2010140800	Fluid Needle Spring	E	W2KIT38	Anti Drop Set 3pcs
10	W2010140600	Needle Packing Nut	F	W2KIT39	Lid Packing 4pcs
11	W2010120100	Air Valve Set		SEL.30	Gravity Paint Filter 50 mesh (Pkt 5)
12	W2COM4001	Trigger Stud			

Updated April 2017

Anest Iwata Australia
1300 277 729 www.anest-iwata.com.au