W101A Compact Spray Gun with Agitator

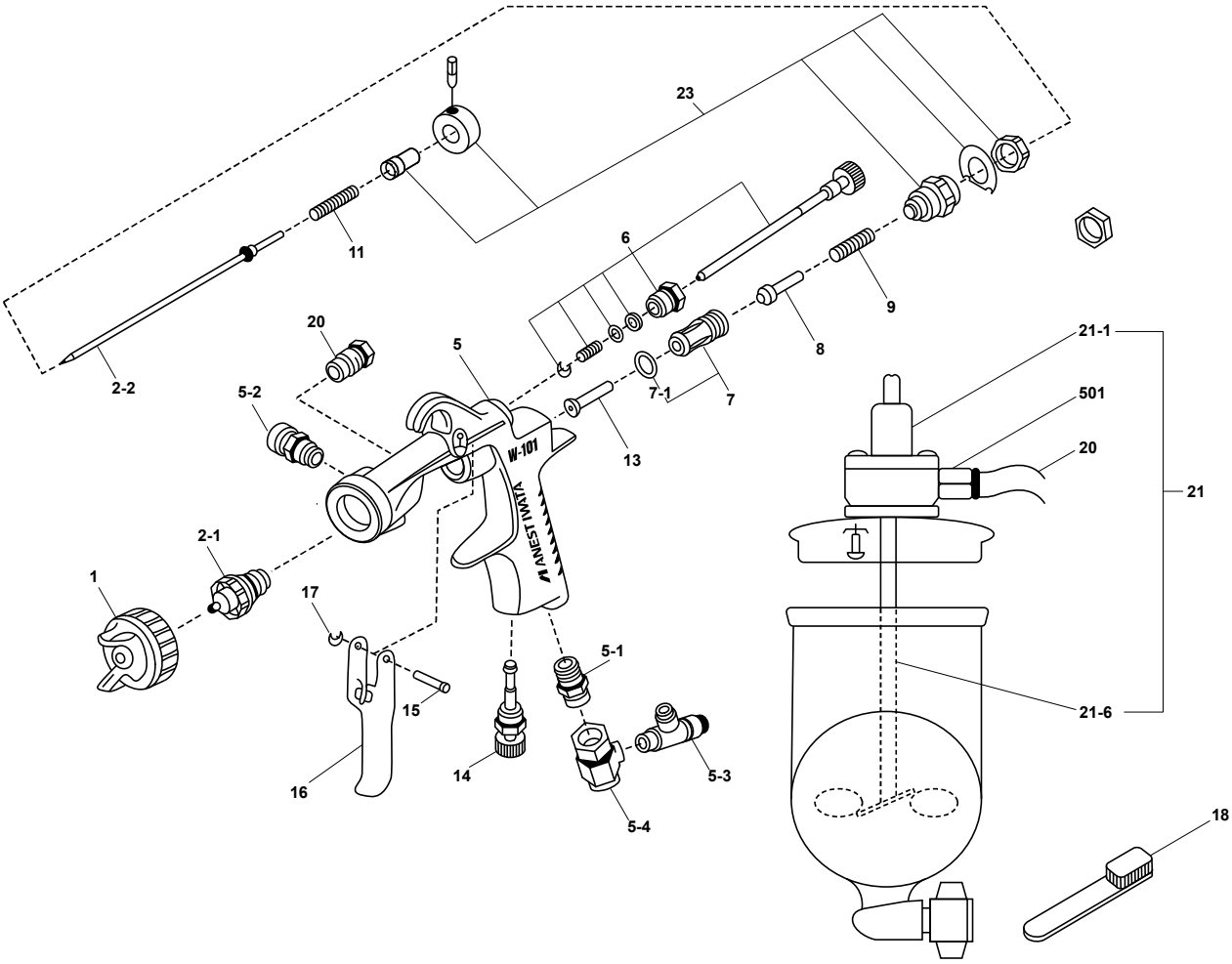

ITEM NO.	PART NO.	DESCRIPTION	ITEM NO.	PART NO.	DESCRIPTION
1	93662610	Air Cap Set H4 (1.3mm)	11	93593530	Fluid Needle Spring
1	93700610	Air Cap Set N1 (1.8mm)	13	93935430	Air Valve Shaft
2-1	93667610	Fluid Nozzle (1.3mm)	14	93845531	Air Adjustment Assembly
2-1	93703610	Fluid Nozzle (1.8mm)	15	93667360	Trigger Stud
2-2	93578530	Fluid Needle (1.3mm)	16	93597530	Trigger
2-2	93703530	Fluid Needle (1.8mm)	17	93912030	E Stopper (2pcs)
5-1	93660300	Air Nipple	18	96990600	Brush
5-2	93584530	Fluid Nipple	20	93500510	Tube
5-3	97992436	Speed Controller	21	93858611	Air Motor Lid Set
5-4	93503510	Joint Seat Set	21-1	93504511	Air Motor
6	93842531	Pattern Adjustment Set	21-6	93505512	Blade Shaft Set
7	93843530	Air Valve Seat Set	501	96801161	Half Union
7-1	96638008	O Ring	23	93857610	Easy Turn Fluid Adjustment Set
8	93591530	Air Valve	25	93765610	Needle Packing Set
9	93719530	Air Valve Spring			

Updated April 2017

Anest Iwata Australia
1300 277 729 www.anest-iwata.com.au